STROMBERG
CARBURETOR
"The Accepted Standard"

Installation and Adjustment *of* New Stromberg Carburetor *for* FORD CARS

The New STROMBERG Carburetor

FOR

FORD CARS

$20.00 Complete

□ □ □ □ □

Manufactured by

Stromberg Motor Devices Co.

58-68 East 25th Street

Chicago

BRANCHES
New York, 9 W. 61st St.
Boston, 66 Brookline Ave.
Detroit, 463 Woodward Ave.
(Service Stations and Distributors Everywhere)

BRANCHES
San Francisco, 1238-44 Van Ness Ave.
Los Angeles, 1200-4 S. Grand Ave.
Portland, Broadway and Couch Sts.
Seattle, 916 E. Pike St.

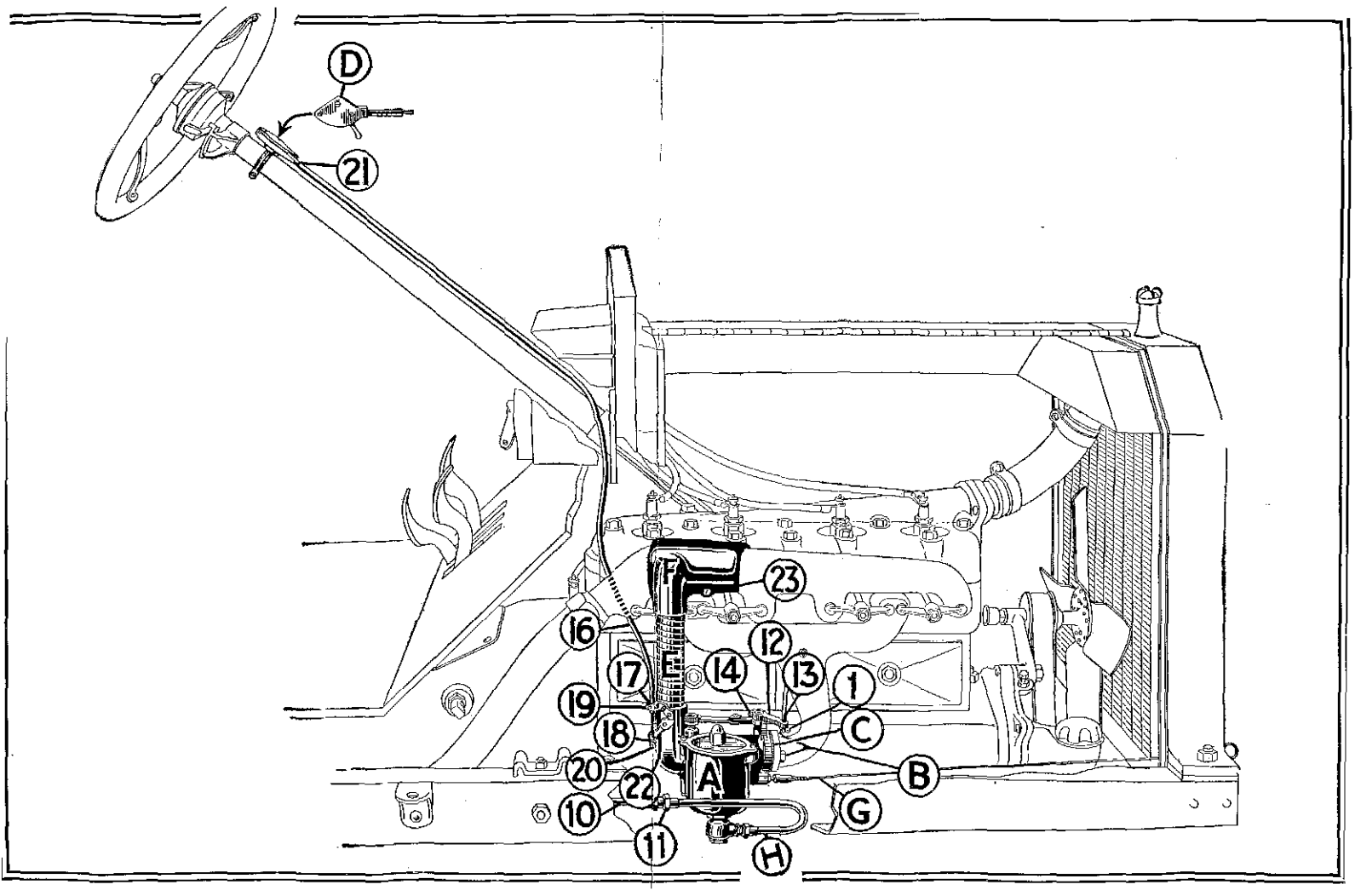
D
21
23
16
12
17
14
13
1
19
C
18
20
A
B
22
G
10
11
H

To INSTALL the New STROMBERG Carburetor on Ford Cars

THE CARBURETOR

First take gasoline line extension H, and connect to old gasoline line No. 10. Before attaching to carburetor, be sure to insert packing and tighten nut No. 11 so there is no chance for leakage.

1—If it is found that the pipe line is not exactly the right shape for installation it can be bent to fit without doing any damage.

2—Then take the cap screws B and insert them through holes in manifold, placing gasket C over the screws.

3—Take carburetor A and place it in position as shown in illustration. Insert the screws in carburetor, and tighten them evenly with a wrench.

4—Connect gasoline extension H as shown in illustration.

5—Connect up wire G on primer as shown in picture.

6—The carburetor is now installed with the exception of the throttle rod. Owing to the various lengths of these throttle rods, it has been found necessary to make an adjustable throttle lever on the carburetor. In order to make this connection—move gas throttle lever on steering column to a closed position, also move throttle lever on carburetor No. 12 to closed position by bringing it as far as it will go toward you. Then, in case throttle rod does not enter hole No. 13, loosen clamp screw No. 14 and move lever No. 12 over until this connection can be made, after which tighten screw No. 14. Insert throttle rod in hole and replace cotter pin No. 1 used on old carburetor.

THE STEERING COLUMN CONTROL

7—Take steering column D which operates air valve in the carburetor, place it in position as shown in illustration; inserting wire between floor board and dash, bringing it around the back of the motor, being sure not to make any sharp bends.

8—Tighten clamp ring in position as shown, about 10 inches below upper end of steering post.

9—Place end of wire tube No. 16 through hole No. 17, and at the same time running wire inside of No. 16 through hole No. 18. The wire tube should come through No. 17 until it just shows on under side.

10—Tighten screw No. 19.

11—Before tightening screw No. 20 be sure that the lever on the steering post control No. 21 is all the way down, and also that No. 22 lever on the carburetor is all the way down as shown in picture. Then tighten screw No. 20.

THE HOT AIR EQUIPMENT

12—Insert hot air tubing E in hot air housing F, approximately ¾ inch. Then place housing F over exhaust manifold as shown in illustration, being sure the hot air tubing is started in carburetor. Tighten screw No. 23 to hold it in position. In order to have hot air housing fit snugly over exhaust, it is advisable to tap it lightly with a hammer as screw is tightened. Turn on the gasoline.

13—Check up carburetor flange and manifold gaskets, making sure that these joints are absolutely tight. Also see that carburetor Float Chamber Bowl does not touch the frame, but has at least $\frac{1}{16}$ in. clearance.

(READ PAGE FOLLOWING BEFORE STARTING)

TO START THE MOTOR

Open throttle control about three-quarters of an inch on the quadrant, advance spark lever to usual position for starting, and pull up lever on steering column control as far as it will go. Then, holding out primer "C" with left hand, crank the motor. The primer is an extra jet out of the float chamber and operates only under suction produced by cranking.

DO NOT FAIL TO HOLD THE PRIMER OUT DURING THE ENTIRE OPERATION OF CRANKING, BUT RELEASE IT IMMEDIATELY WHEN THE MOTOR STARTS, AS FAILURE TO DO SO WILL CAUSE AN OVER-LOAD OF GASOLINE.

Next, move the steering control down gradually until the motor is firing evenly. As the motor warms up, this can be pushed down until it is at the lowest possible position, which leaves valve in air-horn of carburetor wide open.

FINISHING TOUCHES FOR CORRECT ADJUSTMENT

For letters referred to in the following, see page 8.

Do not attempt to make any further adjustment on the carburetor until the motor is thoroughly warmed up to its normal temperature. The final adjustment may then be effected in the following manner:

First, gradually close the throttle with a medium retarded spark until motor slows down to a low idling speed. At this time the throttle stop "Z" should be touching stop screw "W." This screw can be regulated to obtain the desired low motor speed by screwing it out if the motor is running too fast, and in if there is a tendency for the motor to stop. It does not, however, control the mixture adjustment in any way.

If the motor does not hit evenly under this adjustment for low speed or idling, turn low speed adjustment nut "Y" in or out until the desired results are obtained.

The low speed and high speed adjustments are independent of one another, and neither one affects the other in any way.

THE FINAL HIGH SPEED ADJUSTMENT

Open throttle lever on quadrant about one inch, and advance the spark to regular running position. Then, if the motor is hitting unevenly, turn high speed screw "X" right or left one notch at a time, until it is hitting evenly. The correct position will be found by a few trials.

In order to effect the most economical adjustment, the needle controlled by screw "X" should be opened (anti-clockwise) until motor begins to slow down or run irregularly, then turn back two or three notches.

A FEW CAUTIONS TO BE SERIOUSLY REGARDED

Do not attempt to use steering post control or primer for starting when motor is hot, as it will cause an excess amount of gasoline to be admitted, and make starting extremely difficult.

When the motor is fairly warm, use only the primer, leaving the lever on the steering column control all the way down.

In extremely hot weather, if the motor seems to lack its customary power, the removing of the entire hot-air equipment may eliminate the difficulty.

It is impossible to get the maximum amount of economy out of the motor during short trips, as a large percentage of gasoline is used in warming up. To illustrate, on a large car comparative tests were made and in starting the motor when it was cold it was found when the first mile had been covered exactly one quart of gasoline had been consumed. On the second quart used two miles were registered, three miles for the third quart and four miles for the fourth. This meant that with a thoroughly warm motor a mileage of 16 miles per gallon was obtained.

OTHER POINTS ESSENTIAL FOR BEST OPERATION OF MOTOR

1. All cylinders should have full and equal compression. This can be ascertained by noting the resistance given by each cylinder, when cranking slowly with ignition switch off.

2. The spark plugs must be clean, and in the type originally furnished with the car (which we have found to be extremely satisfactory) the gap should be .035 of an inch or a trifle less than the thickness of a new dime.

3. Commutator must be clean and show a smooth track all around. Vibrator points should also be clean and have proper adjustment.

4. Full information on the above can be obtained from the Ford instruction book.

FURTHER POINTS FOR ECONOMICAL RUNNING

You can readily see that the fuel consumption will always be in proportion to the power required to move the car. It will be impossible to obtain the same fuel economy on rough roads, in snowy weather, etc., as obtained under smooth road conditions.

It will also pay the careful driver to see that there is no excessive resistance in the rear wheel brake bands or planitary transmission brake bands, which will tend to act as a drag on the free operation of the car. This can be noted by observing how freely the car rolls in neutral.

It is absolutely necessary to have a sufficient amount of heat to vaporize the fuel. If car is driven in winter, a radiator cover should be used to keep up the proper operating temperature.

A considerable amount of gasoline may be wasted by allowing the motor to run idle for long periods. In leaving the car standing for any length of time, shut off the motor, for this new Stromberg carburetor for Ford cars has been designed so that starting is made certain and easy.

IF AN ENTIRE NEW ADJUSTMENT OF THE CARBURETOR IS NECESSARY

Place throttle lever in wide open position, and holding it firmly in this position, screw high speed adjusting nut "X" (Page 8) to the right or clockwise until it becomes tightened. This means that the needle which it controls is on its seat. Then with the throttle lever in the same position, turn nut "X" back or anti-clockwise twelve (12) notches (one quarter turn). This will give you a temporary adjustment for the high speed range.

Next, the low speed adjustment "Y" (Page 8) must be screwed in as far as it will go, then opened up one-half turn. The adjustment you will then have will be approximately correct, and the motor is ready for starting.

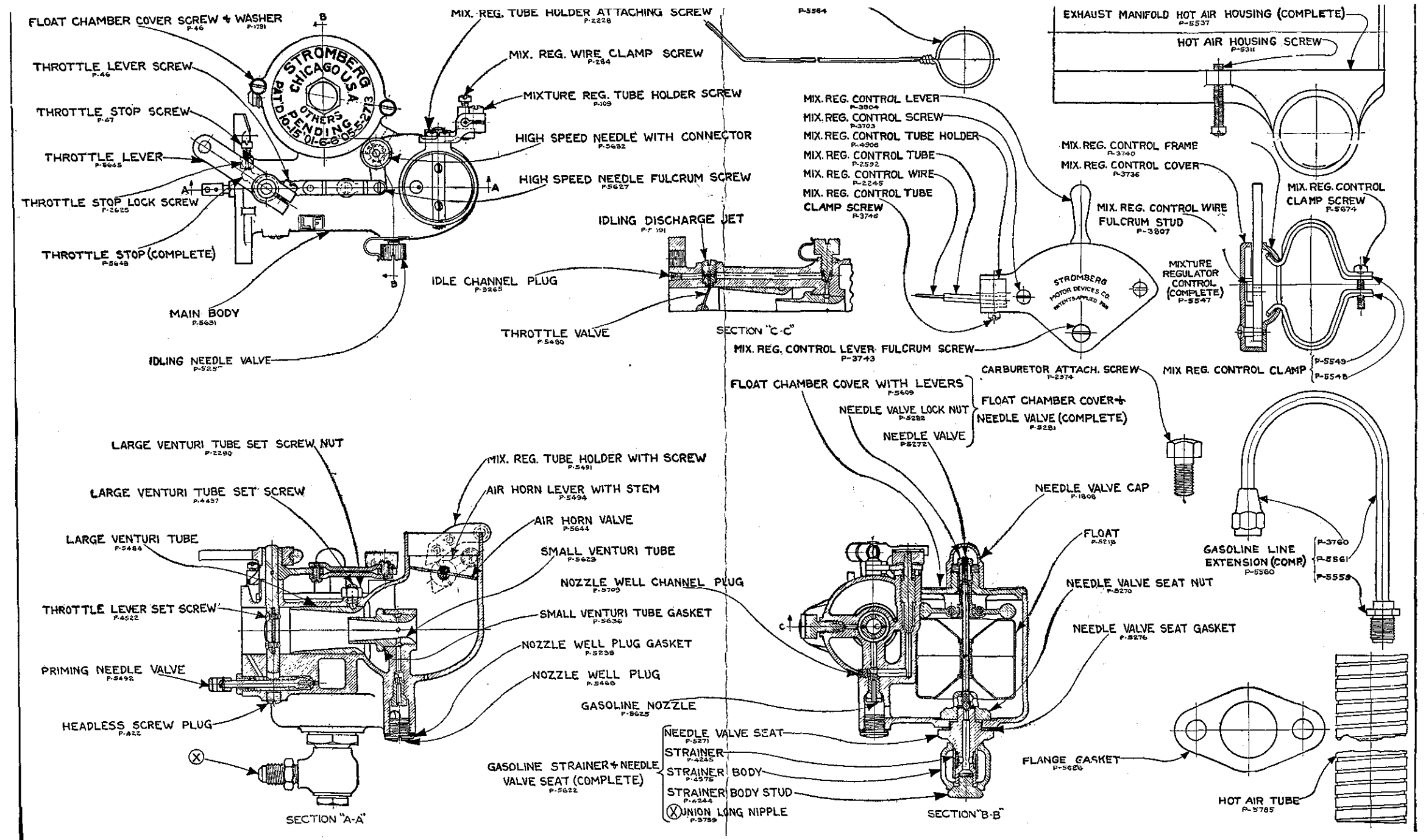
FLOAT CHAMBER COVER SCREW + WASHER P-46 P-1791
THROTTLE LEVER SCREW P-46
THROTTLE STOP SCREW P-47
THROTTLE LEVER P-5645
THROTTLE STOP LOCK SCREW P-2625
THROTTLE STOP (COMPLETE) P-5648
MAIN BODY P-5631
IDLING NEEDLE VALVE P-525
STROMBERG CHICAGO U.S.A.
PAT'D 10-15-01-6-6-05-5-27-13
OTHERS PENDING
MIX. REG. TUBE HOLDER ATTACHING SCREW P-2228
MIX. REG. WIRE CLAMP SCREW P-284
MIXTURE REG. TUBE HOLDER SCREW P-109
HIGH SPEED NEEDLE WITH CONNECTOR P-5682
HIGH SPEED NEEDLE FULCRUM SCREW P-5627
IDLING DISCHARGE JET P-F 191
IDLE CHANNEL PLUG P-3265
THROTTLE VALVE P-5480
SECTION "C-C"
P-5564
EXHAUST MANIFOLD HOT AIR HOUSING (COMPLETE) P-5537
HOT AIR HOUSING SCREW P-5311
MIX. REG. CONTROL LEVER P-3804
MIX. REG. CONTROL SCREW P-3703
MIX. REG. CONTROL TUBE HOLDER P-4906
MIX. REG. CONTROL TUBE P-2592
MIX. REG. CONTROL WIRE P-2245
MIX. REG. CONTROL TUBE CLAMP SCREW P-3746
MIX. REG. CONTROL FRAME P-3740
MIX. REG. CONTROL COVER P-3736
MIX. REG. CONTROL WIRE FULCRUM STUD P-3807
MIX. REG. CONTROL CLAMP SCREW P-5674
MIXTURE REGULATOR CONTROL (COMPLETE) P-5547
STROMBERG MOTOR DEVICES CO. PATENTS APPLIED FOR
MIX. REG. CONTROL LEVER FULCRUM SCREW P-3743
CARBURETOR ATTACH. SCREW P-2974
MIX REG. CONTROL CLAMP P-5549 P-5548
FLOAT CHAMBER COVER WITH LEVERS P-5609
NEEDLE VALVE LOCK NUT P-5282
NEEDLE VALVE P-5272
FLOAT CHAMBER COVER + NEEDLE VALVE (COMPLETE) P-5281
NEEDLE VALVE CAP P-1806
FLOAT P-5218
NEEDLE VALVE SEAT NUT P-5270
NEEDLE VALVE SEAT GASKET P-5276
GASOLINE LINE EXTENSION (COMP) P-5560
P-3760 P-5561 P-5559
LARGE VENTURI TUBE SET SCREW NUT P-2290
LARGE VENTURI TUBE SET SCREW P-4437
LARGE VENTURI TUBE P-5484
THROTTLE LEVER SET SCREW P-4522
PRIMING NEEDLE VALVE P-5492
HEADLESS SCREW PLUG P-422
MIX. REG. TUBE HOLDER WITH SCREW P-5491
AIR HORN LEVER WITH STEM P-5494
AIR HORN VALVE P-5644
SMALL VENTURI TUBE P-5623
NOZZLE WELL CHANNEL PLUG P-5709
SMALL VENTURI TUBE GASKET P-5636
NOZZLE WELL PLUG GASKET P-5238
NOZZLE WELL PLUG P-5466
GASOLINE NOZZLE P-5625
SECTION "A-A"
NEEDLE VALVE SEAT P-5271
STRAINER P-4245
STRAINER BODY P-4575
STRAINER BODY STUD P-4244
UNION LONG NIPPLE P-3759
GASOLINE STRAINER + NEEDLE VALVE SEAT (COMPLETE) P-5622
SECTION "B-B"
FLANGE GASKET P-5626
HOT AIR TUBE P-5785

PRICE LIST OF PARTS USED ON LF FORD CARBURETOR

NAME	PC. No.	PRICE
Air Horn Lever with Stem	P 5494	$0.55
Mix. Reg. Wire Clamp Screw	P 284	.01
Air Horn Valve	P 5644	.25
Float	P 5218	1.00
Float Chamber Cover Screw	P 46	.01
Float Chamber Cover Washer	P 1791	.01
Float Chamber Cover and Needle Valve (Comp.)	P 5281	2.00
Float Chamber Cover with Levers	P 5609	1.50
Needle Valve	P 5272	.75
Needle Valve Lock Nut	P 5282	.02
Gasoline Nozzle	P 5625	.25
Gasoline Strainer and Needle Valve Seat (Comp.)	P 5622	2.25
Needle Valve Seat	P 5271	.90
Strainer	P 4245	.10
Strainer Body	P 4575	.50
Strainer Body Stud	P 4244	.25
Union Long Nipple	P 3759	.35
Headless Screw Plug	P 422	.05
High Speed Needle with Connector	P 5632	1.00
High Speed Needle Fulcrum Screw	P 5627	.01
Idle Channel Plug	P 3265	.02
Idling Discharge Jet	P 5391	.25
Idling Needle Valve	P 5257	.25
Large Venturi Tube	P 5484	.75
Large Venturi Tube Set Screw	P 4437	.05
Large Venturi Tube Set Screw Nut	P 2290	.05
Main Body	P 5631	7.50
Mix. Reg. Tube Holder with Screw	P 5491	.40
Mix. Reg. Tube Holder Screw	P 109	.01
Mix. Reg. Tube Holder Attaching Screw	P 2228	.01
Needle Valve Cap	P 1808	.15
Needle Valve Lock Spring	P 5255	.10
Needle Valve Seat Gasket	P 5276	.02
Needle Valve Seat Nut	P 5270	.35
Nozzle Well Plug	P 5486	.10
Nozzle Well Channel Plug	P 5709	.02
Nozzle Well Plug Gasket	P 5238	.05

NAME	P. C. No.	PRICE
Small Venturi Tube	P 5623	$0.75
Small Venturi Tube Gasket	P 5636	.02
Throttle Lever	P 5645	.40
Throttle Lever Screw	P 46	.01
Throttle Lever Set Screw	P 4522	.01
Throttle Stop (Complete)	P 5648	.55
Throttle Stop Screw	P 47	.01
Throttle Stop Lock Screw	P 2625	.01
Throttle Valve	P 5480	.25
Priming Needle Valve	P 5492	.75
Priming Wire	P 5564	.10
Exhaust Manifold Hot Air Housing (Complete)	P 5537	.50
Hot Air Housing Screw	P 5311	.02
Mix. Reg. Control (Complete)	P 5547	3.00
Mix. Reg. Control Tube	P 2592	.75
Mix. Reg. Control Screw	P 3703	.03
Mix. Reg. Control Cover	P 3736	.75
Mix. Reg. Control Frame	P 3740	.50
Mix. Reg. Control Wire	P 2245	.10
Mix. Reg. Control Lever Fulcrum Screw	P 3743	.10
Mix. Reg. Control Tube Clamp Screw	P 3746	.01
Mix. Reg. Control Wire Fulcrum Stud	P 3807	.02
Mix. Reg. Control Tube Holder	P 4908	.15
Mix. Reg. Control Clamp	P 5548	.40
Mix. Reg. Control Clamp	P 5549	.40
Mix. Reg. Control Clamp Screw	P 5674	.01
Mix. Reg. Control Lever	P 3804	.50
Gasoline Line Extension (Complete)	P 5560	1.00
Gasoline Union Nut	P 3760	.15
Gasoline Line Nipple	P 5559	.40
Gasoline Line Pipe	P 5561	.50
Flange Gasket	P 5626	.10
Hot Air Tube (5¼" x 1¼")	P 5785	.25
Carburetor Attaching Screw	P 2974	.05

The Complete Stromberg Equipment Consists of the following:

A—CARBURETOR

While the design of this carburetor is considerably different from other Stromberg models, it is built to the same standard of material and workmanship, with the same careful inspection of every part, and the same broad guarantee that has always characterized Stromberg products. After the carburetors are completely assembled and thoroughly inspected, they are sent to our laboratory and made to operate a Ford motor perfectly. The balance of the letters shown on carburetor are referred to in making the adjustments.

B—CAP SCREWS

These cap screws are to be used in making the installation, as they are of the correct length, and have the right sized threads for this carburetor.

C—GASKET

This is placed between the carburetor and manifold flange to eliminate the possibility of any air leaking in at this point which would effect the operation of the carburetor.

D—STEERING POST CONTROL

This steering post control operates the butterfly valve in the air horn of the carburetor, and is especially helpful in producing easy starting and warming up of the motor.

E—FLEXIBLE TUBING

Used to conduct the hot air from the hot air stove to the carburetor. It being packed with asbestos cord assures the maximum amount of heat.

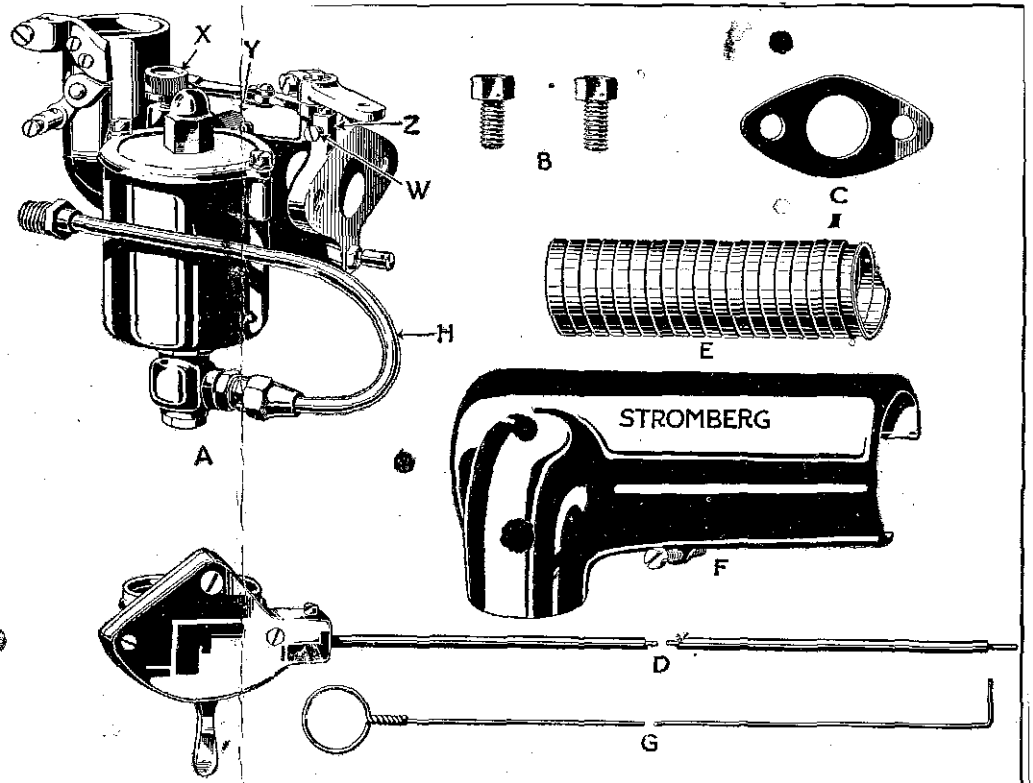

F—HOT AIR STOVE

Smooth running depends primarily upon complete vaporization of the gasoline passing through the carburetor. To get this result, the carburetor must be supplied with warm air. This Hot Air equipment introduces the warm air drawn from around the exhaust manifold into the air intake of the carburetor, causing complete vaporization of the gasoline.

G—PRIMER WIRE

It has been found necessary to have a priming device to insure easy starting when the motor is cold.