STEP 2: With choke valve tightly closed, tighten fast idle adjusting screw until there is .020" (Gauge J-1388) opening between throttle valve and bore of carburetor (side opposite idle port) (Fig. 57). Be sure fast idle adjusting screw is on high step of cam while making this adjustment.

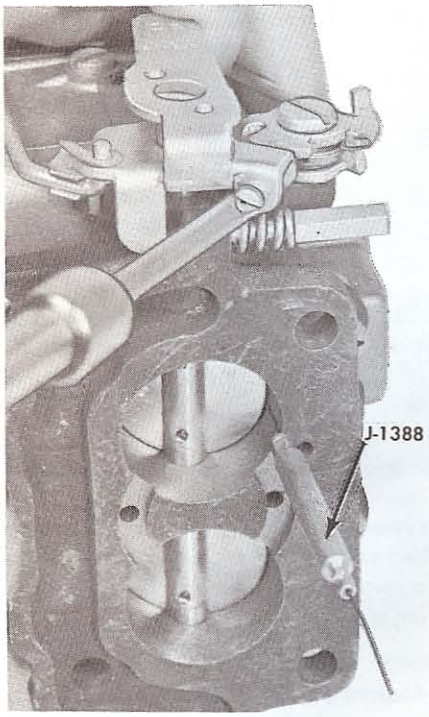

FIGURE 57 — Fast Idle Adjustment — Step 2

Unloader Adjustment

With throttle wide open, there should be 3/16" (Gauge J-818-3) clearance between upper edge of choke valve and inner wall of air horn (Fig. 58). Adjust by bending unloader lip on throttle shaft lever. Use Bending Tool J-1137.

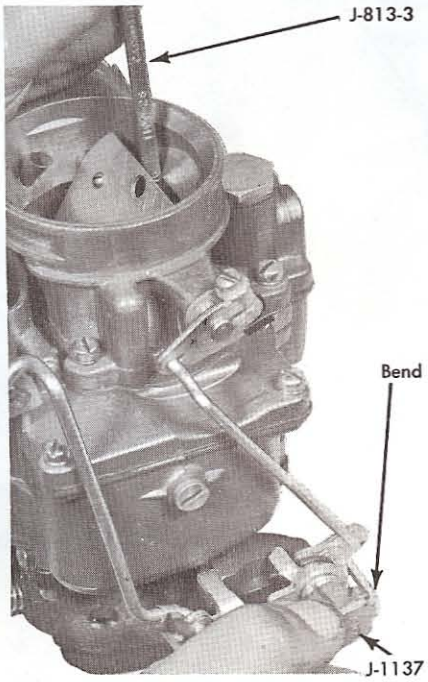

FIGURE 58 — Unloader Adjustment

Dash-Pot Adjustment

A dash-pot is provided on cars equipped with the "E-STICK" transmission to restrict the throttle from closing too rapidly and causing the engine to stall. Turn the idle speed screw out to allow the throttle valve to close tightly in the bore. Depress the dash-pot diaphragm stem fully. Adjust by turning the dash-pot in or out to obtain 1/8" clearance between the stem and the throttle lever (Fig. 59). Tighten the lock nut.

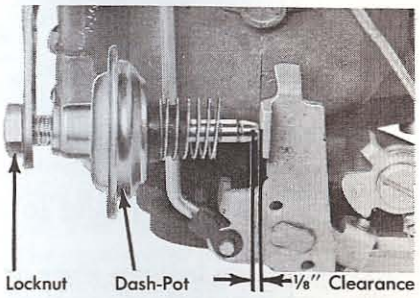

FIGURE 59 — Dash-Pot Adjustment

CARBURETOR — HOLLEY MODEL 1909 List No. 2387 and 2557

The designation Model 1909 is a general description. A more specific identification can be made by referring to the List Number and American Motors Part Number stamped on the fuel bowl. List Number 2387 and 2557 are used on the 10 Series. List Number 2557 carburetor incorporates a dash-pot to control the closing rate of the throttle plate and is used on cars equipped with "E-STICK" transmission. The carburetors are identical in all other respects.

This is a single barrel downdraft carburetor consisting of two main sub-assemblies; the single unit aluminum die cast carburetor body and zinc air horn assembly.

Carburetor Systems

The carburetor has four basic fuel metering systems. These are the idle fuel system, the main fuel system, the power fuel system and the accelerator pump system. In addition, there is also a fuel inlet system which provides the four basic fuel metering systems with their fuel requirements, and the automatic choke system which provides a means of temporarily enrichening the mixture to aid in starting and running a cold engine.

Fuel Inlet System

The fuel inlet system consists of a fuel bowl, float, fuel inlet needle and fuel bowl cover. The fuel inlet seat is cast as an integral part of the bowl cover. Incoming fuel is controlled by a resilient "Viton" tipped fuel inlet needle. The float is a molded cellular plastic material (nitrophyl) and the stainless steel hinge is mounted to the cover with a "Delrin" float axle or shaft. The bowl is vented internally into the air horn and also externally through the bowl cover.

All fuel used by the four basic metering systems enters the carburetor through the fuel inlet needle valve and seat (Fig. 60).

The fuel, under pressure from the fuel pump, flows past the needle valve and into the float chamber. The float rises and falls with the fuel level in the float chamber, moving the fuel inlet needle valve correspondingly to control the amount of fuel admitted to the carburetor. When the fuel in the float chamber reaches a specified level, the float moves the needle valve to a position where it restricts the flow of fuel so that only enough fuel is admitted to replace that being used. Any slight change in the fuel level causes a responsive movement of the float, opening or closing the fuel inlet valve to immediately restore the proper fuel level. The fuel inlet system must constantly maintain this specified level of fuel because the basic fuel metering systems are calibrated to deliver the proper mixtures only when the fuel is at this level.

Idle Fuel System

Fuel for idle and low speed operation passes through the main metering jet into the main well and from the

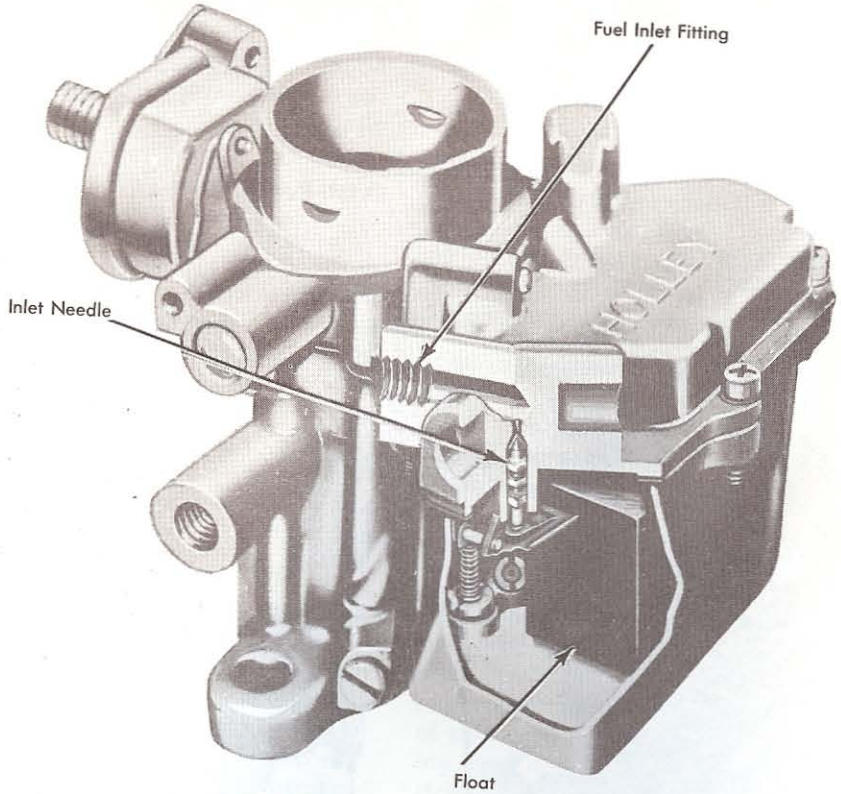

FIGURE 60 — Fuel Inlet System

main well into idle passages where air is introduced through the idle air bleed. The mixture of air and fuel is discharged through the idle port and/or the transfer slot.

The idle fuel mixture is controlled by the idle adjusting needle which seats in the idle discharge hole.

Turning the idle adjusting needle in, moves its pointed tip closer to the seat, restricting the fuel flow out the idle discharge hole. This results in a leaner idle mixture. Conversely, turning the needle out, moves the tip farther from the seat, allowing more fuel to flow out the idle discharge hole for a richer idle mixture.

During off-idle operation, the throttle plate is moved slightly past the idle transfer slot, which begins discharging fuel as it is exposed to manifold vacuum. As the throttle plate is opened still wider, and engine speed increases, the air flow through the carburetor is also increased. This creates a vacuum in the venturi strong enough to bring the main fuel metering system into operation. The flow from the idle system tapers off as the main fuel metering system begins discharging fuel. The two systems are engineered to provide a smooth transition from idle to cruising speeds.

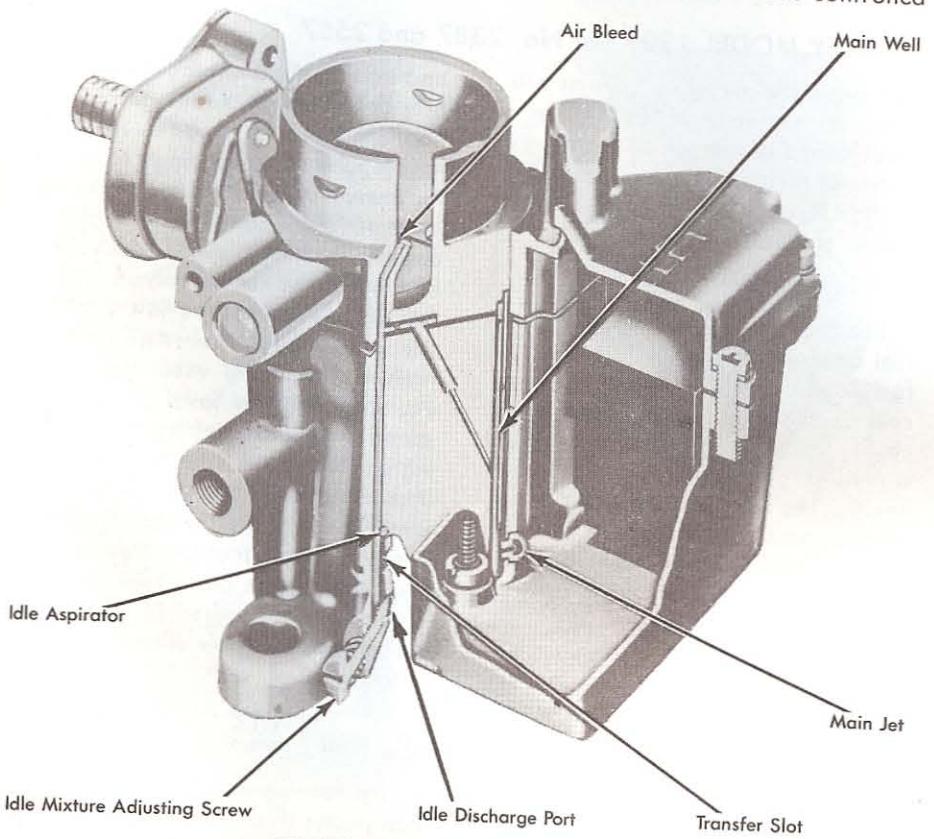

FIGURE 61 — Idle Fuel System

Main Fuel System

The main fuel system consists of the main jet, main well, main well air bleeds and a main discharge nozzle.

Air drawn in by the downward movement of the pistons in the engine passes through the carburetor venturi. This creates a drop of air pressure, commonly called vacuum, in the venturi. The strength of the vacuum is proportional to the amount of air being drawn through the venturi, which, in turn, is governed by the speed and power output of the engine.

At normal cruising speeds, the difference in pressure between the normal air pressure in the top of the float chamber and the vacuum in the venturi, forces a metered flow of fuel from the float chamber through the main metering system and out the main nozzle, which is located in the venturi. The fuel is metered (or measured) by the main jet as it flows into the bottom of the main well (Fig. 62).

Filtered air from the carburetor air inlet passes through the high speed bleed and enters the fuel flow in the main well. The high speed bleed meters a properly increasing amount of air to the fuel at higher speeds, stabilizing the fuel discharge and main-

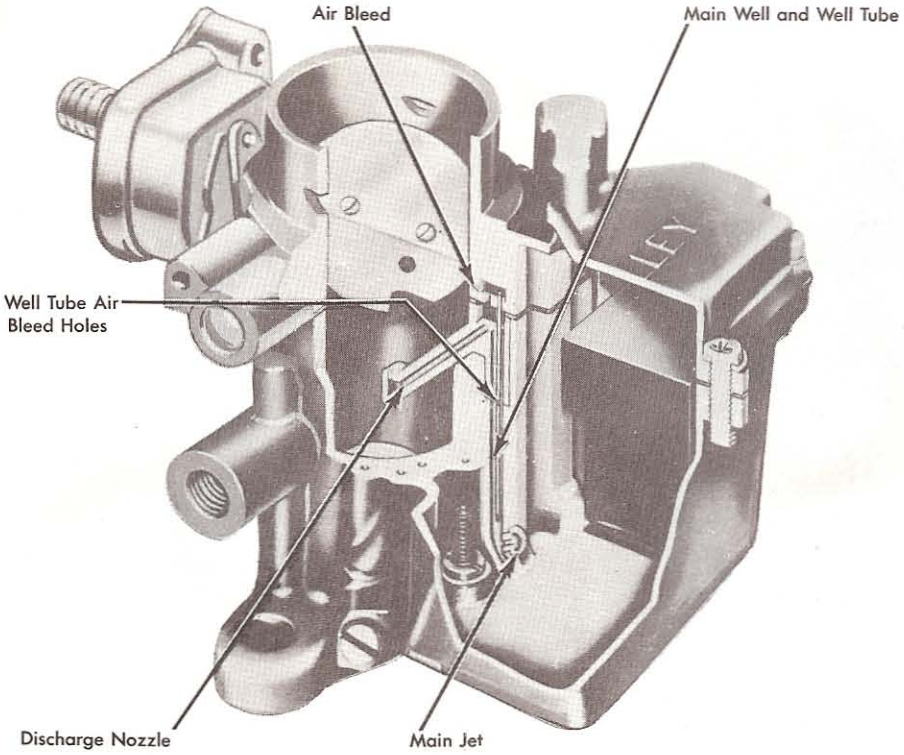

FIGURE 62 — Main Fuel System

taining the required mixture ratios. This emulsion of fuel and air, being lighter than the raw fuel, responds faster to any change in venturi vacuum. It also vaporizes more readily than raw fuel when it is discharged. The fuel continues up the main well and flows out the main nozzle.

The throttle plate controls the amount of the fuel air mixture admitted to the intake manifold, regulating the speed and power output of the engine in accordance with accelerator pedal movement. The distribution pin, on the main nozzle, diverts the air flow in the carburetor to aid in providing proper distribution of the mixture to all cylinders of the engine.

The main well air bleed prevents siphoning or fuel percolation when the engine is shut down.

Power Fuel System

When high-power output is required, the carburetor delivers a richer mixture than that supplied for normal cruising when no great load is placed on the engine. The added fuel for high power operation is provided by the power fuel system, sometimes called the economizer system.

At higher manifold vacuums, the vacuum piston is pushed upward in the passage and the piston spring is compressed (Fig. 63).

When engine speed or load reduces the manifold vacuum to a specified point, the piston stem spring expands and presses the power valve stem downward to open the power valve. This action permits additional fuel to flow into the main fuel system. The vacuum piston and the three piece power valve can be replaced.

Accelerating Pump System

Air flow through the carburetor responds almost immediately to any increase in throttle opening, but there is a brief interval before the fuel can gain the necessary speed to maintain the desired balance of fuel and air. The accelerating pump system mechanically supplies the additional fuel necessary to operate the engine during this interval, and until the other systems can provide the proper mixture.

This is a piston type accelerating pump with a synthetic pump cup. The intake check ball is retained in the pump chamber by the pump return spring. A large needle type discharge valve is used which also prevents pump pull over during high speed driving. The accelerator pump operating link is installed into the outer hole of the

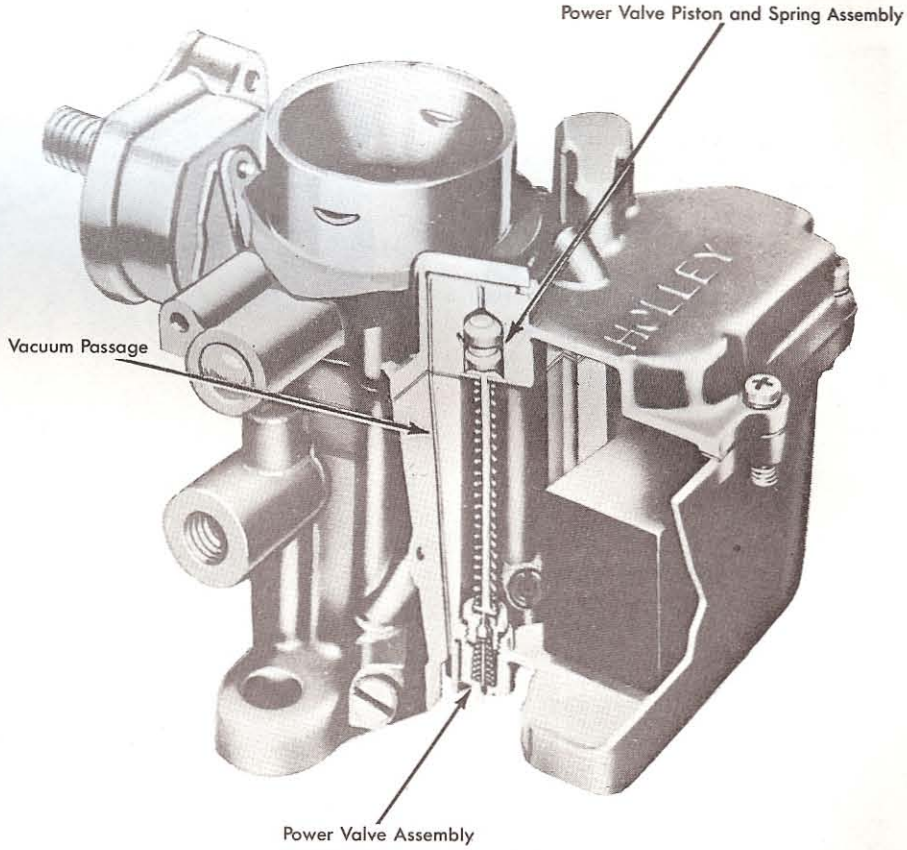

FIGURE 63 — Power Fuel System

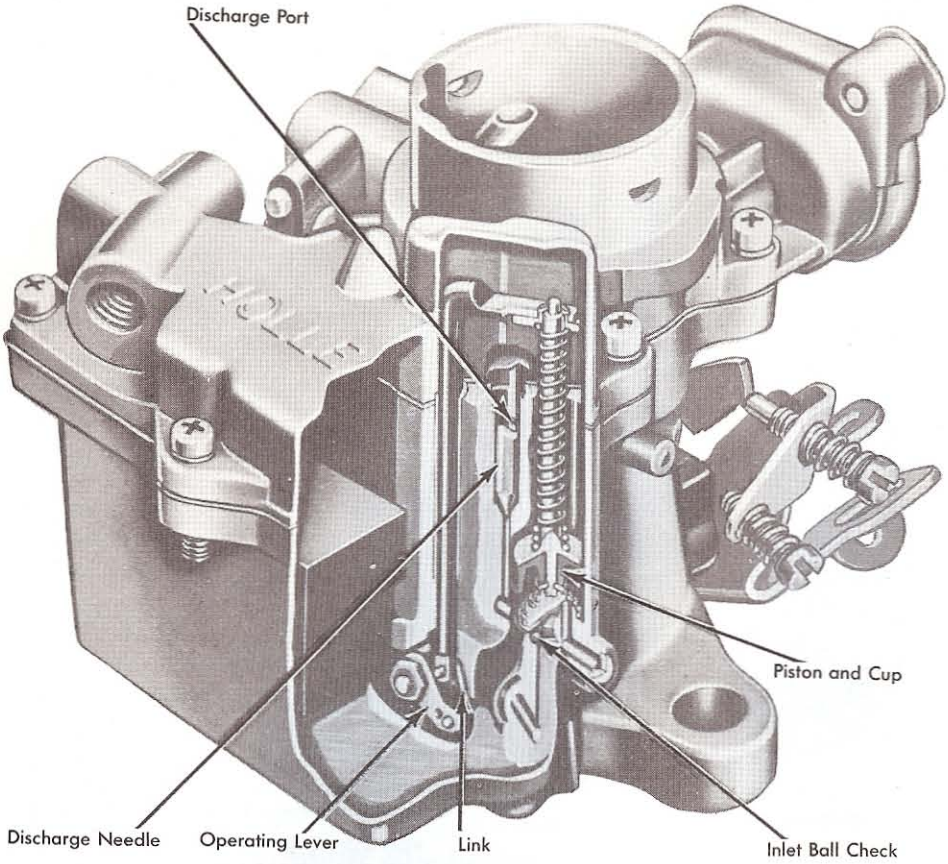

FIGURE 64 — Accelerating Pump System

operating lever for most all driving conditions (Fig. 64). If a leaner pump discharge is desired the link can be installed into the inner hole of the operating lever.

Automatic Choke System

The automatic choke is operated by a combination of manifold vacuum and heated air.

Manifold vacuum is channeled through passages to the choke piston. When the engine starts the choke piston is forced back against a stop screw; partially opening the choke plate. As the engine warms up heated air from the exhaust manifold choke stove is drawn through the choke housing by manifold vacuum.

The heated air changes the temperature of the choke bimetallic spring, allowing the air flow past the choke plate to force the choke plate open against the decreased force of the spring.

When the engine is fully warmed up, the force of the bi-metal is reduced to zero. During this movement, the choke piston link moves freely inside the piston.

The choke piston stop screw is factory adjusted and no field adjustment should be attempted.

DISASSEMBLY

The carburetor consists of two major subassemblies, the air horn assembly and the main body assembly. To facilitate the cleaning, inspection and assembly, use a separate container for the component parts of both major subassemblies.

Remove the air cleaner bail from the carburetor air horn (Fig. 66).

Remove the fuel inlet fitting.

On carburetors equipped with a dash-pot ("E-STICK" transmission) remove the dash-pot bracket screw.

Remove the fast idle cam retainer screw and slide the choke operating rod from the choke shaft lever (Fig. 67).

Remove the automatic choke thermostat clamp screws and separate the thermostatic cap, clamp and gaskets from the air horn (Fig. 68).

Remove the air horn screws and separate the air horn from the main body.

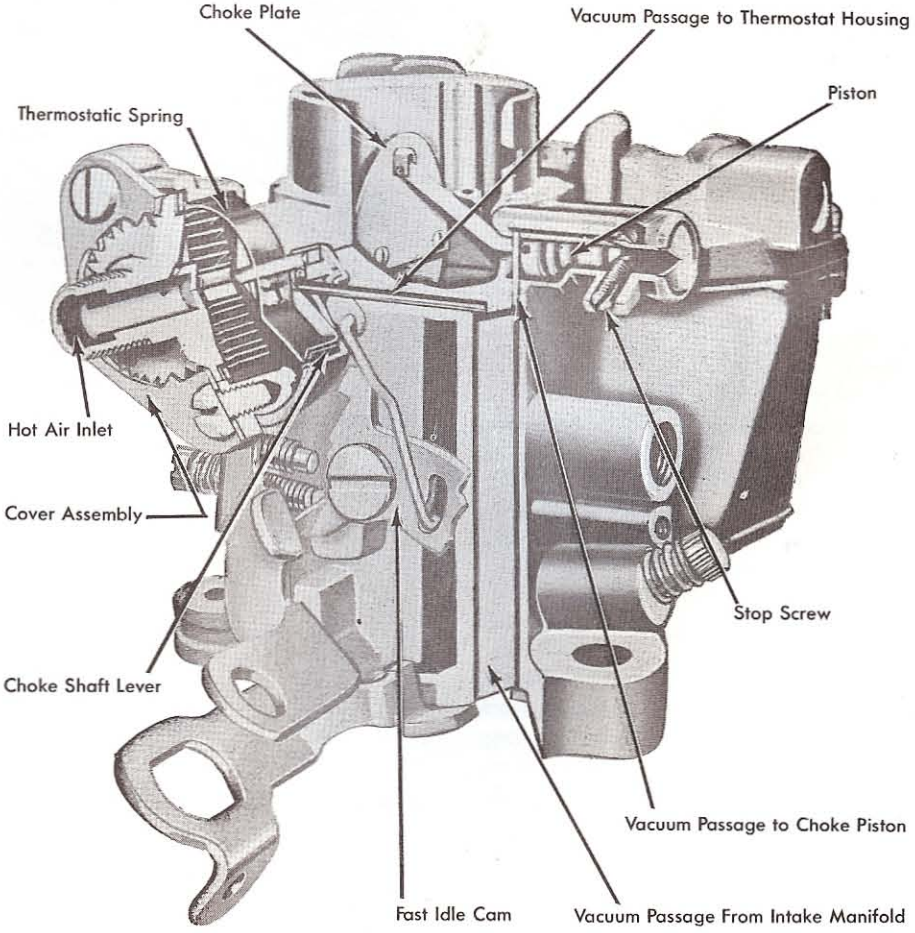

FIGURE 65 — Automatic Choke System

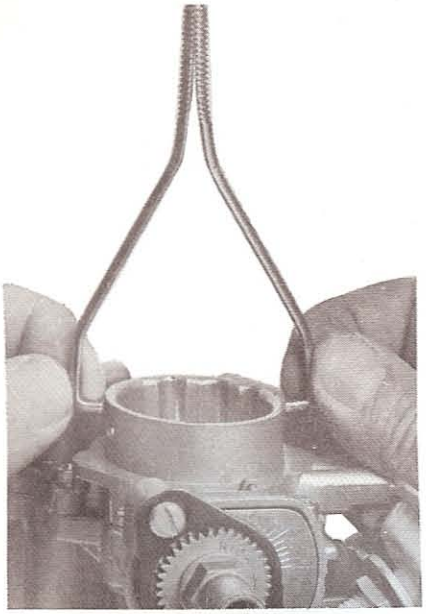

FIGURE 66 — Air Cleaner Bail

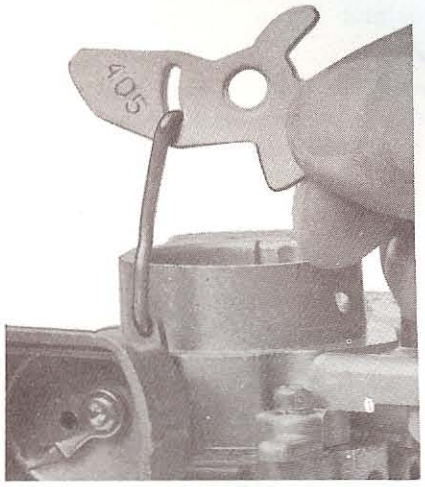

FIGURE 67 — Removing Choke Operating Rod

Use Tool J-10235 to remove the power valve piston assembly (Fig. 69).

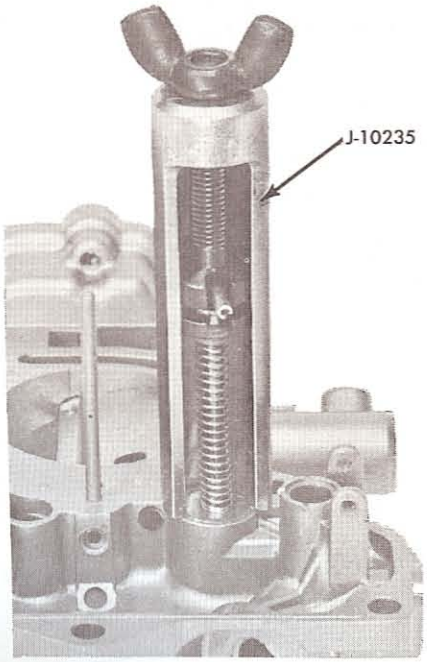

FIGURE 69 — Removing Power Valve Piston Assembly

Invert the main body to allow the accelerator pump discharge needle to drop out.

Remove the nut and lock washer from the end of the throttle shaft. Remove the accelerator pump lever and link, note the proper position (Fig. 70).

Remove the accelerator pump rod and stem assembly from the main body. Separate the accelerator pump assembly (Fig. 71).

Invert the main body to allow the pump inlet check ball to drop out.

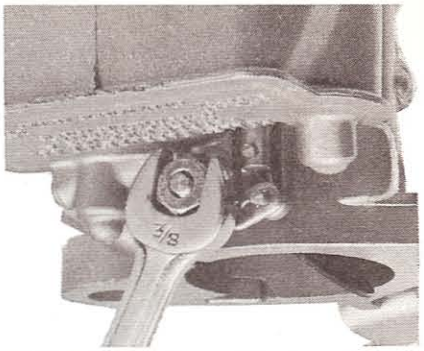

FIGURE 70 — Removing Accelerator Pump Lever and Link

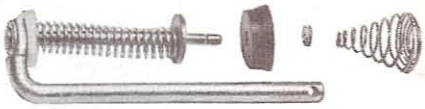

FIGURE 71 — Accelerator Pump Assembly

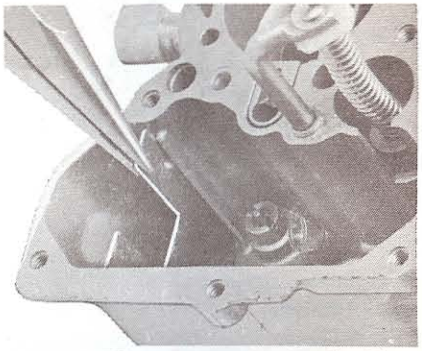

FIGURE 72 — Removing Baffle Plate

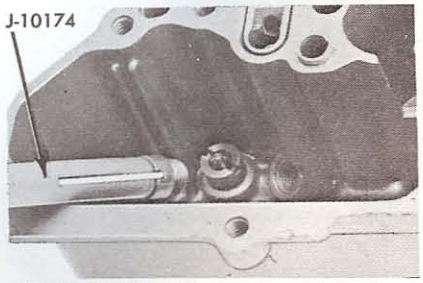

FIGURE 73 — Removing Main Jet

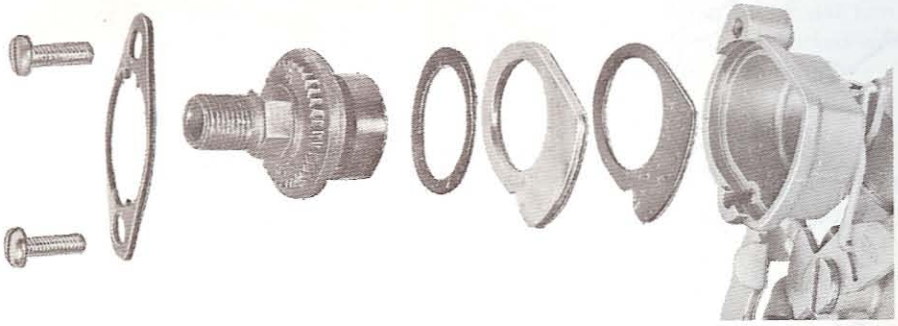

FIGURE 68 — Automatic Choke Components

Remove the float "Delrin" axle and float assembly.

Remove the air horn gasket.

Use Tool J-10240 to remove the fuel inlet needle which is held in position by a staked washer.

Remove the baffle plate from inside the fuel bowl (Fig. 72).

Use Tool J-10174 to remove the main jet (Fig. 73).

Use Tool J-10185 to remove the power assembly (Fig. 74).

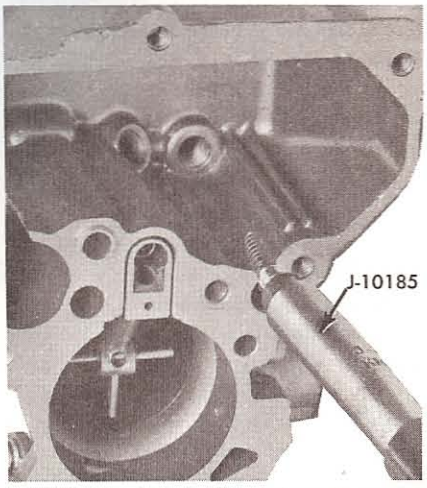

FIGURE 74 — Removing Power Valve Assembly

1. Thermostat Cap Clamp Screw
2. Thermostat Cap Clamp
3. Thermostat Cap and Baffle Assembly
4. Thermostat Cap Gasket
5. Choke Housing Plate
6. Choke Housing Gasket
7. Choke Shaft and Lever Assembly
8. Choke Housing
9. Choke Lever Screw
10. Choke Lever
11. Power Valve Piston Assembly
12. Fuel Inlet Needle Retainer
13. Fuel Inlet Fitting
14. Fuel Inlet Needle
15. Float Hinge Pin
16. Air Horn Assembly
17. Choke Plate Screws (2)
18. Choke Plate

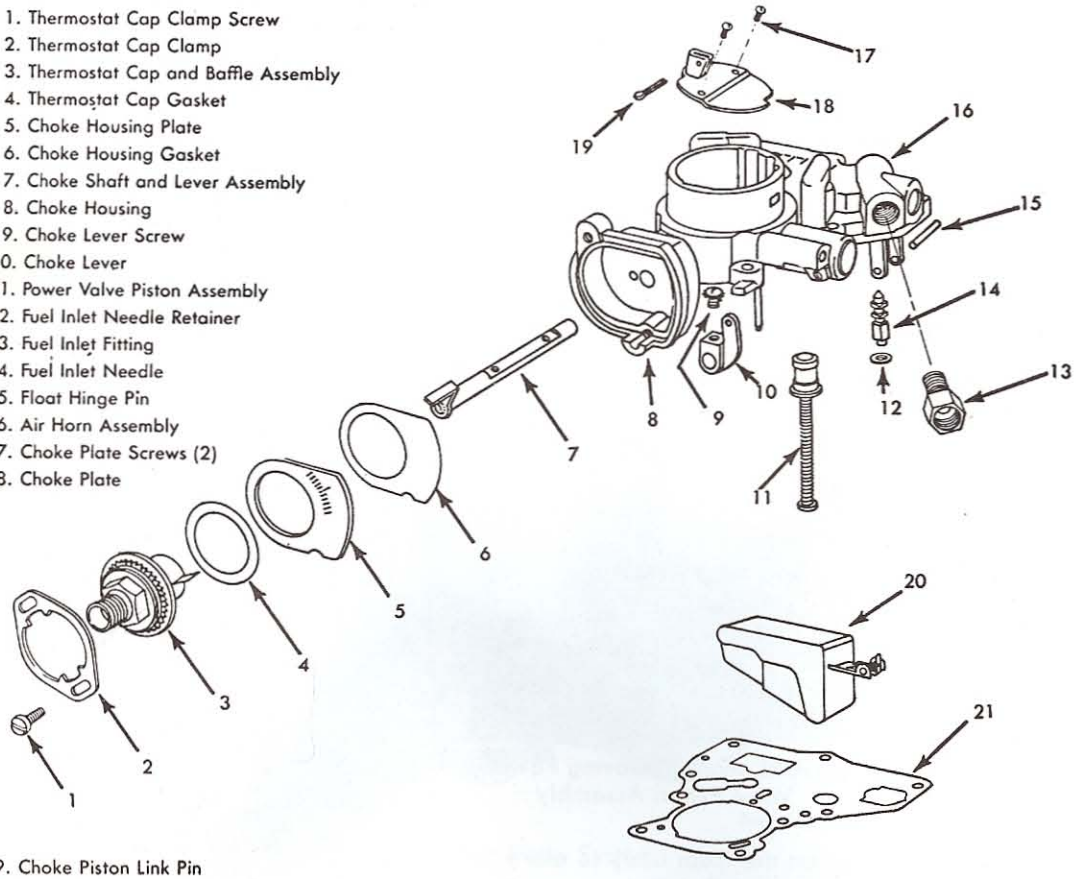

19. Choke Piston Link Pin
20. Float Assembly
21. Body Gasket
22. Pump Rod and Stem Assembly
23. Power Valve Assembly
24. Main Jet
25. Pump Link
26. Pump Lever Nut
27. Pump Lever Nut Lockwasher
28. Pump Lever
29. Idle Needle
30. Dashpot Bracket
31. Dashpot Bracket Screw
32. Dashpot
33. Dashpot Locknut
34. Idle Needle Spring
35. Flange Gasket
36. Throttle Lever and Shaft Assembly
37. Fast Idle Cam Screw
38. Throttle Stop Screw and Spring
39. Fast Idle Screw and Spring
40. Fast Idle Link
41. Fast Idle Cam
42. Main Body
43. Pump Discharge Valve
44. Pump Inlet Valve
45. Pump Return Spring
46. Pump Piston Cup Retainer
47. Pump Piston Cup

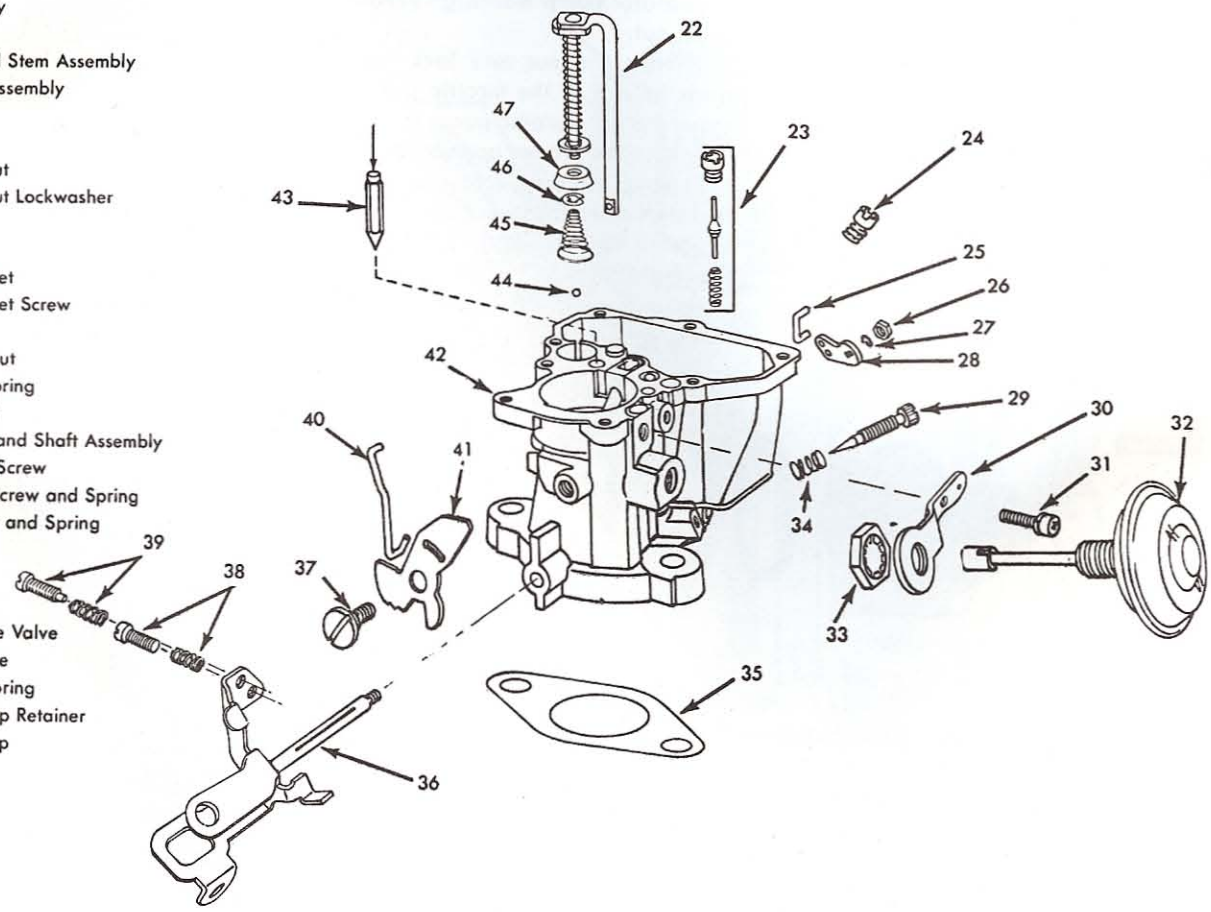

FIGURE 75 — Disassembled View — Holley 1909 Carburetor

Remove the idle mixture screw and spring.

In normal service the removal of the choke and throttle plates and shafts is not recommended. The choke and throttle screws are heavily staked and should removal become necessary, the staked end must be filed off the screws.

CLEANING AND INSPECTION

Soak all casting and METAL PARTS ONLY in a cleaning solution long enough to soften and loosen all foreign deposits. If a commercial carburetor cleaning solvent is not available, lacquer thinner or denatured alcohol may be used. After the parts and castings have soaked sufficiently, rinse them in hot water to remove all traces of the cleaning solution. While rinsing the parts, scrub away all remaining foreign matter with a stiff bristled brush.

Soak each part in clean gasoline for a few seconds, then dry them with compressed air. Compressed air should also be directed through all passages in the casting and through all jets and tubes.

CAUTION: Never attempt to clean a passage with a drill, wire, or similar object as this is liable to distort the passage and affect carburetor performance. Do not use a buffing wheel, wire brush, file or other sharp instrument to remove carbon deposits since this method may also remove the protective plating on the part.

Discard and replace any parts or castings that are cracked or damaged or have stripped threads. Check the venturi in the main body. It must be in good condition, free of nicks, scratches and foreign deposits. Any slight irregularities in the venturi may affect the flow of the carburetor. Be sure the discharge nozzle is not damaged. Check passages in the casting by directing compressed air into one end of every passage and feeling for flow of air out of the other end. Discard and replace the float and lever assembly if it is damaged in any way. Discard and replace the choke or throttle plate if the edges are nicked or the plate is bent or corroded.

ASSEMBLY

Install the power valve assembly with Tool J-10185.

Use Tool J-10174-01 to install the main jet.

Slide the fuel baffle into the fuel bowl.

Install the accelerator pump inlet check ball into the pump cavity (Fig. 76).

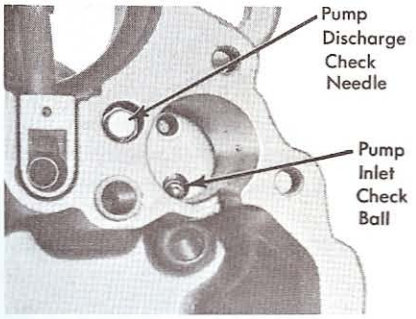

FIGURE 76 — Pump Inlet and Discharge Check Valves

Assemble the accelerator pump rod and stem assembly. Slide the pump assembly into the pump cavity in the main body. Make certain that the pump cup is not wrinkled during installation. Depress the accelerator pump rod fully into the main body to facilitate installation of the pump link. Insert the pump link into the outer hole of the pump operating lever and install the lever on the throttle shaft. Install the lock washer and nut and tighten.

Install the accelerator pump discharge needle into the passage in the main body (Fig. 76).

Install the idle mixture screw and spring. Turn the needle screw in until it seats lightly, then back off one turn. The idle mixture must be checked with the engine running.

CAUTION: Do not turn the idle mixture screw in too tightly. Overtightening will groove the tapered end of the screw and cause an erratic idle.

Use Tool J-10236 to install the power valve piston assembly into the air horn. Tap the tool lightly with a hammer (Fig. 77).

Use Tool J-10237 to stake the power valve assembly into the air horn. Tap the tool lightly with a hammer (Fig. 78).

Install the fuel inlet needle valve and retainer washer. Stake the retainer

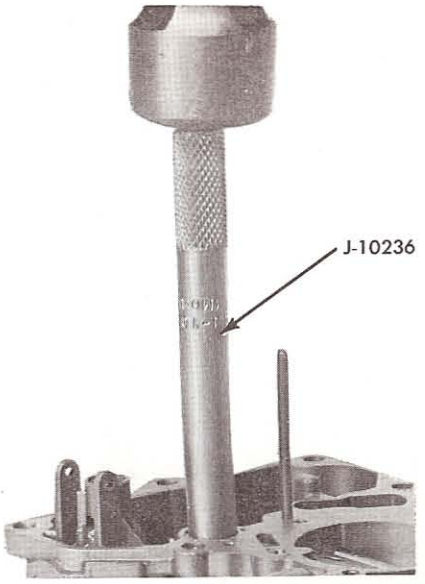

FIGURE 77 — Installing Power Valves Piston

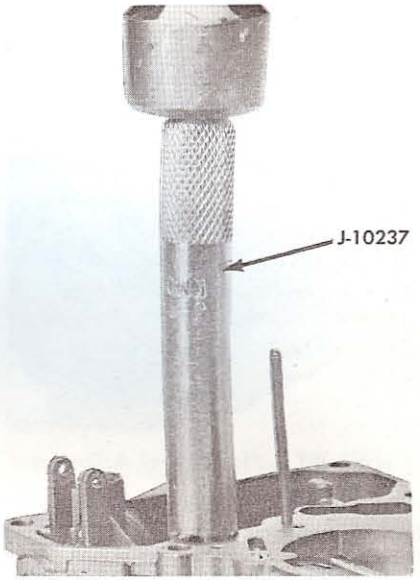

FIGURE 78 — Staking Power Valve

using Tool J-10240 (Fig. 79). Tap the tool lightly with a hammer.

Position the float and hinge assembly on the air horn and insert the "Delrin" float axle.

With the air horn inverted check the float setting by using Tool J-10238. The float should just barely touch the gauge at a point about ¼" from the end of the float. To alter the float setting bend the tab that contacts the fuel inlet needle valve (Fig. 80).

Remove the float and hinge assembly and install the body gasket on the air horn. Install the float assembly. Place the air horn on the main body,

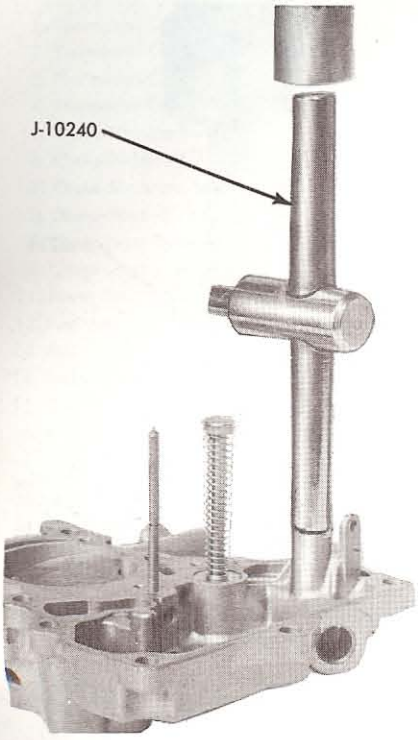

FIGURE 79 — Staking Fuel Inlet Needle Retainer

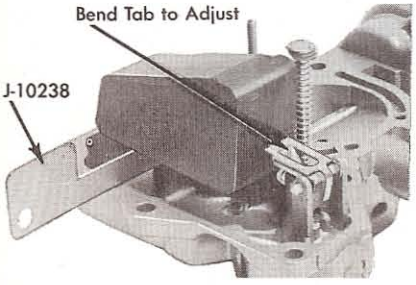

FIGURE 80 — Float Level Adjustment

install the screws and torque screws down evenly.

Insert fast idle cam rod into the choke shaft lever and the fast idle cam. Install the fast idle cam shoulder screw and tighten.

Install the choke thermostat cover, adapter plate and gaskets into the choke housing. Insert the clamp and tighten screws. Set the choke to one notch lean.

Install the dash-pot and bracket on carburetors so equipped.

Install the fuel inlet fitting and distributor vacuum spark fitting.

Install the carburetor air cleaner bail. Use a new carburetor flange gasket and make certain the parting surfaces are clean and not damaged prior to installing the carburetor on the intake manifold.

CARBURETOR ADJUSTMENTS HOLLEY MODEL 1909

Float Level Adjustment

On the car float adjustment requires removal of the air cleaner and bail. Separate the air horn from the main body and remove the body gasket. With the air horn inverted adjust the float by bending the tab that contacts the fuel inlet needle valve to provide just enough clearance to enable the installation of Float Gauge J-10238 (Fig. 80). The float should just contact the gauge at a point about ¼ inch from end of float. Install the body gasket and assemble the carburetor bail and air cleaner.

Unloader Adjustment

The choke unloader setting is necessary to enable the choke plate to be opened by the mechanical accelerator linkage, in the event the engine is flooded during starting, and thereby allow air to enter the intake manifold for a more combustible mixture.

To check the unloader setting move the throttle to the wide open position. The unloader tab on the throttle lever should contact the fast idle cam and force the choke plate to open far enough to allow 9/32", gauge included in Chain Gauge J-21207 to be inserted between the choke plate and the air horn (Fig. 81). To adjust bend the unloader tab.

Fast Idle Adjustment

The fast idle setting with the carburetor off the car is made by turning the fast idle adjusting screw to obtain .038" clearance, gauge included in Chain Gauge J-21207, between the throttle valve and the bore on the side opposite the idle port with the fast idle screw on the high step of the cam.

The fast idle setting can be altered to suit individual requirements, however the aforementioned bench setting is most desirable for best overall operation.

On the car fast idle adjustments should be made with a tachometer connected to observe R.P.M. changes. Turning the fast idle adjusting screw in clockwise will increase R.P.M. while turning the screw out counterclockwise will decrease R.P.M. The normal fast idle R.P.M. on the high step of the fast

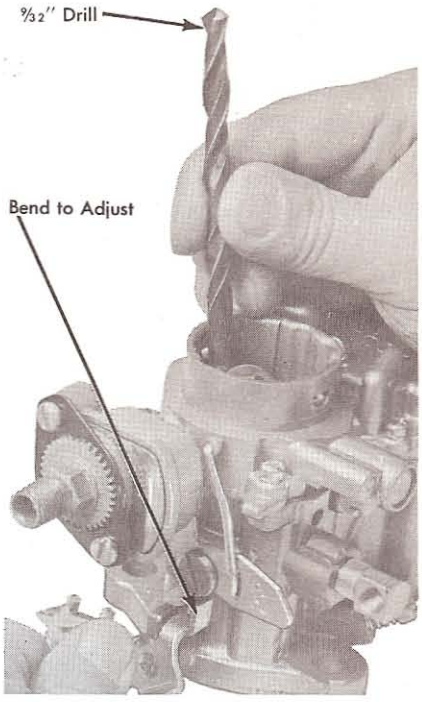

FIGURE 81 — Unloader Adjustment

idle cam and engine at normal operating temperature is approximately 1800 R.P.M.

Dash-Pot Adjustment

A dash-pot is provided on cars equipped with the "E-STICK" transmission to restrict the throttle from closing too rapidly and causing the engine to stall. The adjustment is made with the throttle set at curb idle (not fast idle). Depress the dash-pot stem in until it bottoms. Adjust by turning the dash-pot in or out to obtain 9/64" clearance, gauge included in Chain Gauge J-21207, between the stem and the throttle lever (Fig. 81). Tighten the lock nut.

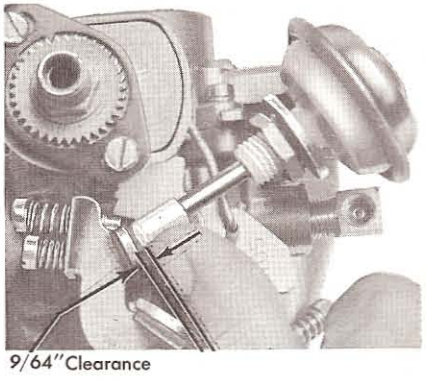

FIGURE 82 — Dash-Pot Adjustment

Automatic Choke Adjustment

The automatic choke setting is one notch lean for all normal driving. If for some reason a richer or leaner mixture is desired during the engine warm up period, it can be obtained by rotating the thermostat cover. Never set the index mark on the choke more than two graduations off the specified setting.

Idle Adjustment

The idle adjustment should be made with the engine at normal operating temperature. Adjust the throttle stop screw to idle the engine at 500 R.P.M. with automatic transmission in neutral, 500 R.P.M. with air conditioning on, or 550 R.P.M. standard and overdrive transmission or "E-STICK" transmission.

Set the idle mixture adjusting needle to give the highest steady manifold vacuum or the smoothest running and maximum idle speed. Turning the idle mixture adjusting needle in clockwise provides a leaner mixture. Turning the needle out counterclockwise provides a richer mixture. If this adjustment results in an increase in idle R.P.M. great enough to require resetting the throttle stop screw, then the idle mixture adjusting needle should also be reset, leaving it slightly on the rich side.

CARBURETOR
HOLLEY MODELS 2300 AND 4150 (OPTIONAL)

The Holley Model 2300 is a dual downdraft carburetor used as standard equipment on the 80 Series with the 8.7:1 compression ratio engine. The Model 4150 is a four bore downdraft carburetor used as optional equipment on the 80 Series with the 9.7:1 compression ratio engine.

The two primary bores of both carburetors supply the fuel-air mixture throughout the entire range of operation. The two secondary bores of the four barrel carburetor function only when speed or load requires them. Each barrel has its own venturi, idle system, main metering system, booster venturi and throttle plate.

To effectively provide the correct fuel-air mixture during all phases of engine operation, the carburetor is equipped with the following basic fuel metering systems.

The Idle System, provides a rich mixture for smooth idle and low speed performance; the Accelerating Pump System, provides additional fuel during acceleration; the Main Metering System, provides an economical mixture for normal cruising conditions; and the Power Enrichment System, provides a richer mixture when high power output is desired.

In addition to these four basic systems, there is a fuel inlet system that constantly supplies the fuel to the basic metering systems. There is also a choke which temporarily enriches the mixture to aid in starting and running a cold engine.

The four barrel carburetor also incorporates a secondary main metering system and a by-pass system which only operates when a greater quantity of fuel-air mixture is required. Any reference to the carburetor secondary system in this section applies only to the Model 4150 carburetor.

The difference in air pressure within the carburetor provides the force for proper discharge of fuel for the various engine speed and load conditions. This pressure is actually less than atmospheric, due to the slight restriction of air flow through the air cleaner. However, to simplify the explanation of the functioning of the fuel metering systems, the pressure within the carburetor will be considered as being atmospheric.

CARBURETOR CIRCUITS

Fuel Inlet System

All fuel first enters the fuel bowl which stores fuel at a specific head for the four basic metering systems. The fuel enters the fuel bowl through a screen ahead of the fuel inlet valve, which is frequently referred to as the fuel inlet needle and seat assembly. The amount of fuel entering the fuel bowl is determined by the space between the movable needle and its seat and also by the pressure from the fuel pump.

This carburetor incorporates a Viton tipped fuel inlet needle. This synthetic material provides a better seal and thereby can maintain a more constant fuel level in the carburetor bowl. It is not readily affected by small particles of foreign matter.

Movement of the needle in relation to the seat is controlled by the float and hinge assembly which rises and falls with the fuel level. As the fuel level drops, the float drops, opening the needle valve to allow fuel to enter the float chamber. When the fuel reaches a specified level, the float moves the needle valve to a position where it restricts the flow of fuel, admitting only enough to replace that being used. Any slight change in the fuel level causes a corresponding movement of the float, opening or closing the fuel inlet needle valve to immediately restore or hold the proper fuel level. The fuel inlet system must constantly maintain the specified level of fuel as the basic fuel metering systems are calibrated to deliver the proper mixture only when the fuel is at this level.

The float chamber is vented internally by the vent tube at all times. At curb idle or when the engine is stopped, the chamber is also vented by the external vent on top of the fuel bowl. This external vent provides a release of excess fuel vapors from the bowl.

Idle System

At idle and low speeds, the air flow through the carburetor is not sufficiently strong enough to draw fuel through the venturi for the main metering system. Intake manifold vacuum is high because of the greater restriction to the air flow by the nearly closed throttle plates. This high manifold vacuum is used to provide the pressure differential to operate the idle system.

The carburetor utilizes two identical idle systems, one for each bore. Since the two passages function identically, only one side will be considered in this explanation.

At idle, the normal air pressure in the float chamber causes the fuel to flow through the idle system to the greatly reduced pressure area below throttle plate. Fuel flows from the float chamber through the main jet then into the small angular but horizontal